NKB5000(-FC)

HD Network Control Keyboard

NKB5000-FC: with extension mini keypad module

NKB5000: only host, without extension mini keypad module

Features:

- Keyboard to control
  - DAHUA standalone DVR
  - DAHUA high speed dome
  - Central management platform
  - Network video server
- RS232, RS485 & network connections (WLAN)
- Four dimensional joystick control of PTZ functions
- Support 4K decoding live view
- Support 4CH HDMI output
- Support snapshot and recording to U-disk
- Support video-wall display control
- Preset position, auto scan, auto pan, auto tour & pattern control
- NKB5000-FC model includes an extension keypad module

(The module is not available in platform preview mode; F1 cannot be called in platform TV wall mode)

Technical Specification

Model

Model	NKB5000(-F)

System

Main Processor	Dual-core Processor
Operation System	Embedded LINUX 4.2.0

Display

Video Output	3×HDMI, 1×DVI(HDMI to DVI converter)
Stream Type	H.265, H.264, MPEG, H.265+, H.264+,Nonstandard
Decoding Capability	3CH@12MP(25fps)/4CH@4K(25fps)/8CH@5MP(25fps)/12CH @3MP(25fps)/16CH@2MP(30fps)
Stream Type	H.265, H.264, H264H, H264B, MJPEG, MPEG4, SVAC, SmartH.264 and non standard
Display split	1/4/9/16
Screen	10.1" TFT LCD touch screen (1280*800)

Audio & Alarm

Audio Input/Output	Audio Input Interfaces 1-Ch, 3.5 mm connector (2.0Vp-p, >1KΩ); Audio Output Interfaces 1-Ch, 3.5 mm connector (2.0Vp-p, >600Ω);HDMI output interfaces 1 and 2 support embedded audio output
Loudspeaker	1 (reserved)
Alarm In	4, High-low level (reserved)
Alarm Out	4 (3 relay, 1 12V_1A) (reserved)

General

Network Interface	2×RJ-45 port (100/1000M)), WLAN
USB Interface	2 USB3.0, 2 USB2.0
WLAN	Support 2.4GHz
RS485	1 for ptz control
RS232	1 (debugging), 1 (reserved)
RS422	1 (reserved)
Maximum Number of Users	64 (including "admin")
Max RS485 Addresses (Each User)	256
Max Number of PTZ (IPC) That Can Be Added over Network (Each User)	30000

Environmental

Power Supply	DC12V, 4A
Power Consumption	25W(max), 18W(standby)
Working Temperature	-10°C ~+55°C
Working Humidity	10%~95%
Atmosphere Pressure	86kpa~106kpa
Dimension	Host: 425mmx194mmx59mm (W×D×H) (exclude joystick) Mini Keypad: 421mmx105mmx26mm (W×D×H)
Weight	3.73kg(exclude package)

NKB5000(-FC)
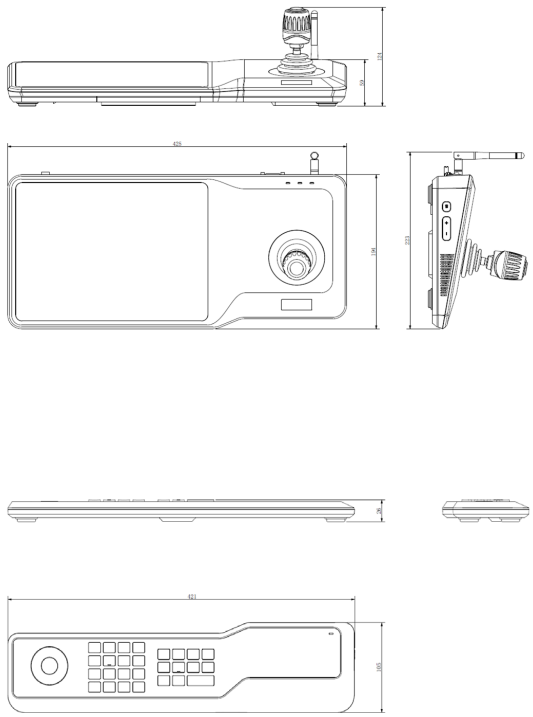
Dimensions(mm)